TILBOÐ

Vesturvör 30c, 200 Kópavogur
Sími 575-4600

Númer	EXTQ9863
Dags	10/12/2024

Viðskiptavinur	Sendist til	Sölumaður
Leikfélag Kópavogs	**Leikfélag Kópavogs**	Juliette 354 575 4600 juliette@exton.is
Funalind 2 201 Kópavogur	Funalind 2 201 Kópavogur	
692-9692	692-9692	

Skilmálar	Pöntunarnúmer

#	Lýsing	Magn	Einingarverð	Línusamtala
	Ljósaborð			
1	MA Lighting 4010519 grandMA3 onPC command wing XT	1	1.756.785	1.756.785
	Samtals án vsk:			1.756.785
	20,0% Afsláttur:			- 351.357
	Samtals án vsk:			1.405.428
2	Dell Professional 24 - 23,8" snertiskjár	1	79.990	79.990
	Ljós			
3	Prolights JETWASH7 Jet Wash7 - 7x20W RGBW moving wash light with a 4°- 55° zoom The Jet Wash7 is a compact and fast LED moving wash light with motorized zoom control. The 20W Osram RGBW LED source provides plenty of output and combined with a highly efficient optical system capable of zooming from 4° to 55°, this unit can easily work as beam or wash light. The Jet Wash7's colour mixing system features precise and advanced control with superior white and saturated tones, and a clean and intuitive user interface similar to the other series.	1	206.766	206.766
4	Prolights JETHYB200 JETPAR7ZIPBK 200W Hybrid Moving head, with 3.5° - 40° zoom and color wheel	1	384.410	384.410
5	Prolights VERSAPAR VERSAPAR is a LED zoom PAR The multi-purpose concept combining high brightness, wide zoom range and advanced colour mixing make this a unique fixture. VERSAPAR is equipped with 7° - 60° unrivalled zoom range, high efficiency, perfect chromatic uniformity, HD dimming technology and totally silent operation. Features: 12x10 W RGBW / FC LED Wide zoom range from 10° - 60° (1:6 zoom) HD dimming with selectable PWM Silent operation for studio application	1	110.664	110.664
6	Prolights MINIVERSAPAR 7x10W RGBW compact zoom PAR Mini VersaPar is a compact indoor LED zoom PAR designed for rental companies. The multi-purpose concept combining high brightness, wide zoom range and advanced colour mixing truly makes this a unique fixture. Mini VersaPar is equipped with 10° - 40° unrivalled zoom range, high efficiency, perfect chromatic uniformity, HD dimming technology and totally silent operation.	1	80.086	80.086

Skjal sótt af '0000000000' dags: 23.10 2026

TILBOÐ

Vesturvör 30c, 200 Kópavogur
Sími 575-4600

Númer	EXTQ9863
Dags	10/12/2024

Viðskiptavinur	Sendist til	Sölumaður
Leikfélag Kópavogs	**Leikfélag Kópavogs**	Juliette 354 575 4600 juliette@exton.is
Funalind 2 201 Kópavogur	Funalind 2 201 Kópavogur	
692-9692	692-9692	

Skilmálar	Pöntunarnúmer

#	Lýsing	Magn	Einingarverð	Línusamtala
7	Prolights LUMIPIX12UQPRO LumiPix 12UQPRO LumiPix 12UQPRO is a 1 m long linear colour changer equipped with 12 high-efficiency RGBW / FC LED (8 W each). The control system is customisable allowing section control and advanced possibilities in effect generation such as LED video or sound activated arrays.	1	45.139	45.139

Samtals	2.312.483
VSK 24%	554.996
Flutningur	0
Samtals m/VSK	**2.867.479**

Skjal sótt af '00000000000' dags: 23.10 2026

TILBOÐSSKILMÁLAR

Kapallengdir og vinna er áætluð.
Kostnaðaráætlun þessi er trúnaðarmál og einungis ætluð þeim sem fyrir henni er skráður.
Öll verð miðast við aðflutningsgjöld og gengi gjaldmiðla þann 10/12/24 og háð breytingum á því.
Tilboð þetta miðast við að 33% andvirði tækjabúnaðar sé greitt við pöntun, 33% við afhendingu og eftirstöðvar samkvæmt samningsbundnum greiðslufresti viðskiptavinar.
Tilboðið er gert og unnið skv. almennum söluskilmálum Exton ehf.
Gert með fyrirvara um endanlega hönnun, mögulegar villur í magni og samlagningu.
Miðað er við að rafvirki verkkaupa dragi út strengi, útbúi lagnaleiðir og raflagnir (230V).

Prentað 12/10/24 14:37:04

grandMA3 onPC command wing XT

Art.-No. 4010519

An onPC wing with real console feeling - you think that is impossible? Take a look at the grandMA3 onPC command wing XT! Experience the grandMA3 onPC console solution with the pre-installed onPC software on the built-in MA motherboard. Just connect a touch screen monitor and you can control 4 096 parameters right on the spot!

So, if you are looking for an extremely versatile control solution for small and medium sized theaters or installations, the grandMA3 onPC command wing XT is the right choice for you. It is also a powerful programming tool for TV/streaming studios as well as houses of worship, and it can also serve as a console for pre-programming and backup scenarios.

Of course, it is built to the same highest quality standards in software and hardware that apply to the entire grandMA3 product line. That means you have a reliable solution when you are on the road, touring or controlling your festival stage. With the command area the grandMA3 onPC command wing XT provides you the closest possible look and feel of the larger grandMA3 consoles!

Do you need a few numbers? You have access to 40 physical playbacks, 16 assignable X-Keys and a dedicated master area. With the grandMA3 onPC command wing XT you directly control the maximum 4 096 parameters of the onPC solutions. Therefore, you have three DMX ports and two Ethernet Gigabit ports for DMX-over-Ethernet protocols.

But we are not finished yet! All inputs and outputs of a grandMA3 console are directly built-in. On the rear panel you will find MIDI, timecode, and DC remote ports to receive and send external signals and trigger actions in your show. Additionally, you can connect up to four monitors to create your individual workspace!

The device will be shipped with Windows IoT - so we can make sure it can get a proper factory reset image if needed. Please do not forget: The grandMA3 onPC software offers the same feature set as the larger consoles - so there is no compromise on functionality. With the powerful MA Start Show you simply boot the grandMA3 onPC command wing XT and get creative right away!

Skjal sótt af '0000000000' dags: 23.10 2026

Features

- onPC wing for real-time control of 4 096 parameters in combination with grandMA3 onPC software – pre-installed on a built-in MA motherboard
- Command section same as grandMA3 onPC command wing
- 29 rotary RGB backlit encoder
- 5 dual encoders
- 10 motorized 60 mm faders
- 40 separate playbacks
- 16 assignable x-keys
- 2 motorized A/B faders 100mm
- 1 Level-Wheel
- Individually backlit and dimmable silent (clickless) keys

Scope of delivery

Art.-No.	Article	Quantity
4011454	Dust cover grandMA3 onPC command wing / XT	1
4011387	MA Magnetic plate for easy labeling of 10 faders, for grandMA3	1
4025838	MA Quick Manual for grandMA3 onPC command wing XT	1

1 x MA power cable, IEC-C plug (lockable), length 2.0 m, open end

Technical Specifications

Parameters	4 096 (HTP/LTP)
Parameters Mode2	not applicable (no Mode2)
Operating voltage/ Supply voltage	AC 100 - 240 V; 50/60 Hz
Power	max. 100 VA
Operating Temperature	0 °C up to 40 °C / 32 °F up to 104 °F
Dimensions	620 x 427 x 112 mm / 25 x 17 x 5 in (width x depth x height)
Net weight	12 kg / 27 lbs
Connectors	1 x IEC-60320 C14 cord 2 x RJ45 2 x DMX512-A Out (5pin XLR female) 1 x DMX512-A In (5pin XLR male) 1 x MIDI In (5pin DIN female) 1 x MIDI Out (5pin DIN female) 1 x Linear Timecode (3pin XLR female) 1 x Audio In (mini jack 3.5mm) 1 x Audio Out (mini jack 3.5mm) 1 x GPI General Purpose Interface (D-SUB DE9 female) for remote control 4 x DisplayPort 1.2 for external screens 2 x USB 2.0 (type A) 2 x USB 3.0 (type A) 1 x LED desk light (4pin XLR female)

Article

Art.-No.	Article
4010519	grandMA3 onPC command wing XT

Skjal sótt af '0000000000' dags: 23.10 2026

Accessories

Art.-No.	Article
4023744	MA Case grandMA3 onPC command wing XT, (by Peli)
4023473	MA Case grandMA3 onPC command wing XT, (by Amptown)
4023575	grandMA3 onPC fader wing
4011080	MA LED desk light grandMA3, straight plug XLR 4pin, length 27", including cover
4011081	MA dust cover for LED desk light, 27"

More product pictures

Skjal sótt af '0000000000' dags: 23.10 2026

Jet Wash7

7x20W RGBW moving wash light with a 4°- 55° zoom

The **Jet** Wash7 is a compact and fast LED moving wash light with motorized zoom control. The 20W Osram RGBW LED source provides plenty of output and combined with a highly efficient optical system capable of zooming from 4° to 55°, this unit can easily work as beam or wash light. The **Jet** Wash7's colour mixing system features precise and advanced control with superior white and saturated tones, and a clean and intuitive user interface similar to the other series.

MAIN FEATURES

- Compact form factor and fast movements
- Zoom from 4° to 55° with high optical efficiency
- Precise white CCT and colour mixing

VERSIONS

Code	Housing
JETWASH7	Black
JETWASH7WH	White

TECHNICAL SPECIFICATION

LIGHT SOURCE
- Source:7x20 W RGBW Osram Ostar LEDs
- Luminous flux:(4°) 1'232 lm - (55°) 1'993 lm @full
- Lux:(4°) 28'754 lx - (55°) 611 lx @3 m full
- Source life expectancy: > 50.000 h

OPTICS
- Zoom:4° - 55 ° motorised linear zoom
- Lens type: honeycomb gapless plano-convex optics

COLOUR SYSTEM
- Colour mixing: RGBW / FC
- CCT: CCT control, + / - green correction, tungsten emulation
- White presets:2.800 K ~ 10.000 K
- Colour wheel: virtual colour wheel with macros

DYNAMIC EFFECTS
- Control Resolution: 16-bit dimmer
- Special features: linear crossfade channel from any white to any colour; virtual CTO on colours

BODY
- Hardware on-board: sockets for quick-Lock Omega bracket (clamp not included)
- Pan angle:540 °
- Tilt angle:233 °
- Pan/Tilt resolution: bit 16-bit
- Feedback: automatic repositioning after accidental movement
- Body: aluminium structure with high-resistance polycarbonate cover
- Body colour:see variants

CONTROL
- Protocols: DMX512, RDM
- DMX channels:23 channel
- RDM: RDM for remote monitoring and settings
- Display: LCD high resolution colour display with autoflip
- Firmware upgrade: yes, via USB - DMX interface (UPBOX2) not included

ELECTRONICS
- Dimmer: linear 0 ~ 100% electronic dimmer
- Dimmer curves:4 selectable dimming modes available
- Strobe / shutter:1 - 30 Hz, electronic
- Operating temperature: -10° ~ +45°
- LED Control: flicker free operation
- Selectable PWM: 600 ~ 50.000 Hz

ELECTRICAL
- Mains power supply: 100-240V - 50/60Hz
- Max power consumption:160 W
- Output (at 230V):up to 15 units on a single power line
- Power factor:> 0,94

PHYSICAL
- IP rating:20
- Cooling: forced air with fan
- Suspension and fixing: any position with quick-lock omega brackets
- Signal connection: Amphenol XLR 5p IN/OUT connectors
- Power connection: Neutrik powerCON TRUE1 IN/OUT connectors
- Dimensions (WxHxD):279x377x205 mm
- Weight:8,3 kg

CERTIFICATIONS / APPROVALS
- Certifications / Approvals: CE, UKCA, RCM

ACCESSORIES & RELATED PRODUCTS

9513FXWL03	Ass. 3x2.5mm TH07 cable, 16A 3p 230V CEE plug, MENAC3FXW socket, L.3 m
9533FXWL03	Ass. 3x2.5mm TH07 cable, SHUKO plug, MENAC3FXW socket, L.3m
958225L03	3x2.5mm TH07 Cable, 16A 3p PwCon MXW, 16A 3p PwCon FXW, L. 3m
C6002B	Slim aluminum clamp, 200kg loading, 48-51mm tubes, M10 bolt, Black
FCLASTRAW7PIX	Flight case for 6 pcs of ASTRAWASH7PIX
RSR0630B	Steel security cable for hanging bodies, inox steel shackle, L=60 cm, black
ASTRAW7PEC	Egg Crate for ASTRAWASH7PIX
OS24	Quick-lock omega bracket.
UPBOX2	Firmware uploader kit, USB IN, 3-pin XLR DMX OUT

Skjal sótt af '0000000000' dags: 23.10 2026

PRESET FULL ON

Beam angle 50%: 4°

Beam angle 50%	Field angle 10%	Cut off angle 2,5%	Intensity ratio in 120° cone	Intensity ratio in 90° cone
4,3°	5,7°	6,5°	100,0%	99,9%

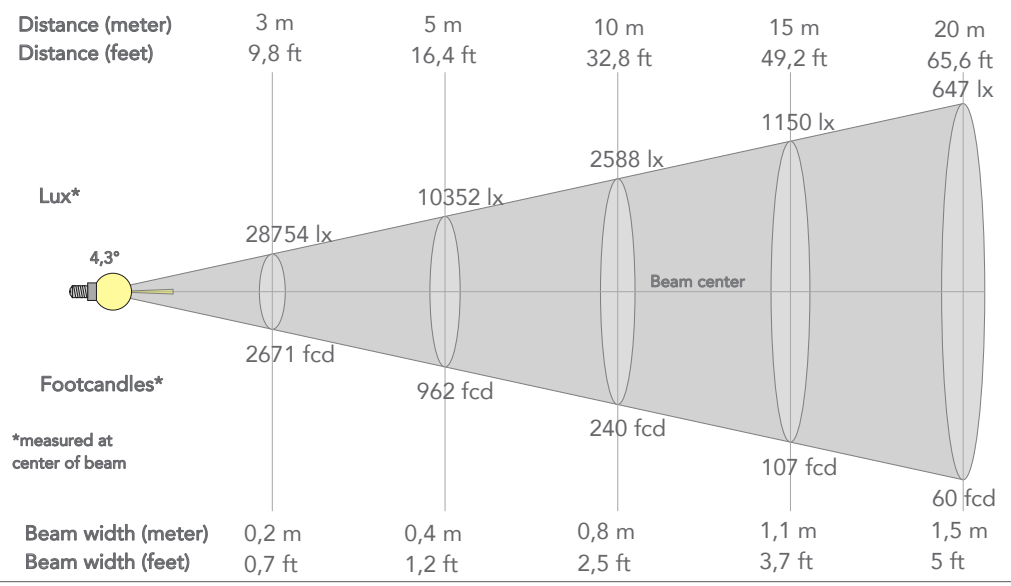

PRESET FULL ON

Beam angle 50%: 55°

Beam angle 50%	Field angle 10%	Cut off angle 2,5%	Intensity ratio in 120° cone	Intensity ratio in 90° cone
36,3°	55,5°	65,7°	100,0%	100,0%

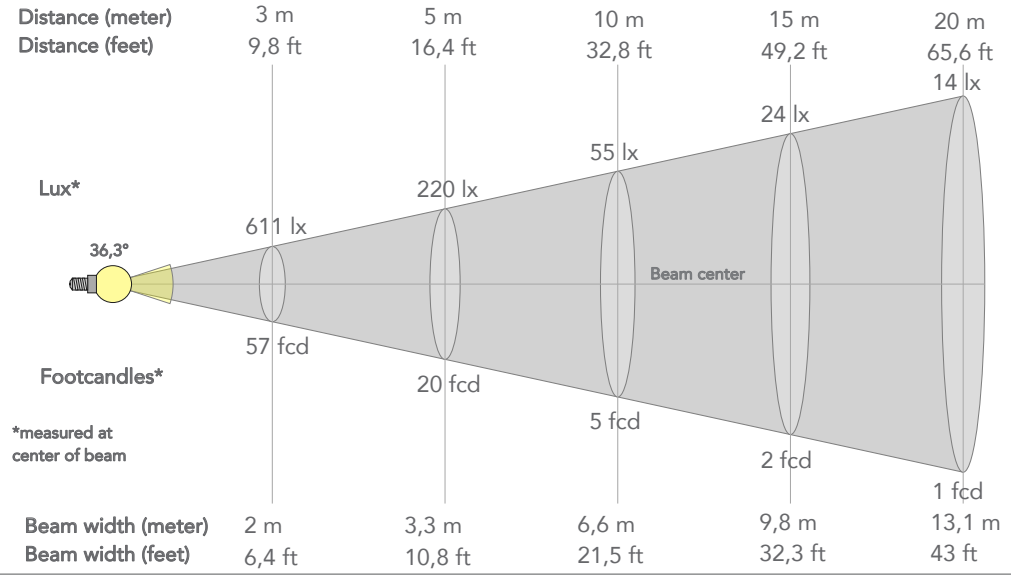

TECHNICAL DRAWINGS

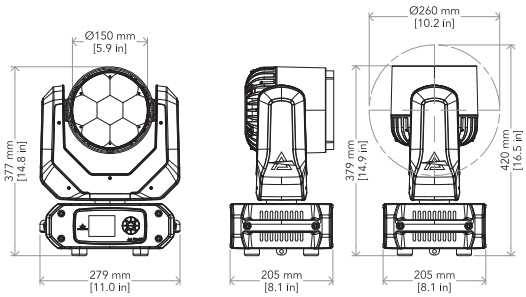

Visit our website
for specifications and
tech documentations

Skjal sótt af '00000000000' dags: 23.10 2026

Jet Hybrid200

200W Hybrid Moving head, with 3.5° - 40° zoom and color wheel

ORDER CODE: **JETHYB200**

Jet Hyb200 is a budget-friendly, hybrid beam-spot moving light, offering high-quality and powerful output in a compact design. Tailored for both mid-air effects and image projections, it boasts an impressive 8,000-lumen output from a 200W LED source. Its fast zoom ranges from 3.5° to 40°, making it an excellent replacement to compact discharge hybrid fixtures.
The **Jet** Hyb200's dynamic effects suite includes a color wheel with 13 dichroic filters, two gobo wheels featuring 8 rotating and 17 static gobos, along with prism and frost capabilities for diverse creative needs.

MAIN FEATURES

- Beam-Spot hybrid moving light with 200W LED source
- Linear zoom ranging from 3.5° to 40°
- 15 kg

TECHNICAL SPECIFICATION

LIGHT SOURCE
- Source:200 W high-power white LED
- CCT:7.000
- Luminous flux:(3,5°) 5'962 lm - (40°) 7'593
- Lux:(3,5°) 69'503 lx - (40°) 1'461 lx @5 m full
- CRI:> 70 (CCT 6000K and CRI > 84 with filter on color wheel)
- Source life expectancy: > 30.000 h

OPTICS
- Zoom:3,5° - 40 ° motorised linear zoom
- Lens diameter:100 mm
- Lens type: HD anti-reflection lenses with achromatic coating
- Focus: motorised

COLOUR SYSTEM
- CCT: on wheel 3.200 K
- Colour wheel:11 colour filters
- Colour wheel:High CRI colour filters

DYNAMIC EFFECTS
- Control Resolution: 16-bit dimmer
- Rotating gobos:8 rotating gobos + open, interchangeable, indexing
- Gobo size:outer: 13,9 mm - image: 11 mm - thickness: up to 3 mm
- Fixed gobos:17 fixed gobos + open
- Circular prism:5 f with bi-directional rotation, indexing
- Frost: linear 0 - 100% light frost filter, interchangeable

BODY
- Hardware on-board: sockets for quick-Lock Omega bracket (clamp not included)
- Pan angle:540 °
- Tilt angle:260 °
- Pan/Tilt resolution: bit 8 / 16-bit
- Feedback: automatic repositioning after accidental movement
- Body: aluminium structure with high-resistance polycarbonate cover
- Body colour: RAL 9004

CONTROL
- Protocols: DMX512, RDM
- DMX channels:20 channel
- RDM: RDM for remote monitoring and settings
- Display: LCD high resolution colour display with autoflip
- Firmware upgrade: yes, via USB - DMX interface (UPBOXPRO/ UPBOX2) not included or via USB pen drive

ELECTRONICS
- Dimmer: linear 0 ~ 100% electronic dimmer
- Dimmer curves:4 selectable dimming modes available
- Strobe / shutter:1 - 30 Hz, electronic
- Display battery: self-charging battery backup
- Operating temperature: -10° ~ +45°
- LED Control: flicker free frequency with adjustable PWM
- Selectable PWM: 600 ~ 50.000 Hz

ELECTRICAL
- Mains power supply: 100-240V - 50/60Hz (max absolutes range: 90-264V - 50/60Hz)
- Max power consumption:276 W
- Standby power:56W
- Output (at 230V):9 units on a single power line
- Power factor:> 0,94
- Inrush current:30A @115VAC /<50A @230VAC

PHYSICAL
- IP rating:20
- Cooling: combination of heat pipe cooling system and low noise fan
- Suspension and fixing: any position with quick-lock omega brackets
- Pan / tilt lock: for transportation and maintenance
- Signal connection: Neutrik IP XLR 5p IN/OUT connectors
- Power connection: Seetronic powerCON TRUE IP65 IN/OUT
- Dimensions (WxHxD):356x538x205 mm
- Weight:15 kg

CERTIFICATIONS / APPROVALS
- Certifications / Approvals: CE, RCM, FCC, cTUVus

ACCESSORIES & RELATED PRODUCTS

FCLJETH200	Flight case for 4 pcs of JETHYB200
JH200HF	Optional accessory heavy frost filter for JETHYB200
OS24PLUS	Quick-lock omega bracket, M12 hole
C6002B	Slim aluminum clamp, 200kg loading, 48-51mm tubes, M10 bolt, Black
C6016B	Selflock slim clamp, 250Kg load, 48-51mm tubes, M10 bolt incl, Black
RSR1235B	Steel security cable for hanging bodies, inox steel shackle
9533FXWL03	Ass. 3x2.5mm TH07 cable, SHUKO plug, MENAC3FXW socket, L.3m
9513FXWL03	Ass. 3x2.5mm TH07 cable, 16A 3p 230V CEE plug, MENAC3FXW socket, L.3 m
958225L03	3x2.5mm TH07 Cable, 16A 3p PwCon MXW, 16A 3p PwCon FXW, L. 3m
TOUR53415L03	Dmx cable HC5340. CANC5MXX XLR 5p->CANC5FXX XLR (f) 5p, L.3m
UPBOXPRO	Firmware uploader kit, USB IN, 5-pin XLR DMX OUT connector

Skjal sótt af '0000000000' dags: 23.10 2026

PRESET FULL ON

Beam angle 50%: 3.4°

Beam angle 50%	Field angle 10%	Cut off angle 2,5%	Intensity ratio in 120° cone	Intensity ratio in 90° cone
3,4°	4,7°	5°	88,9%	87,1%

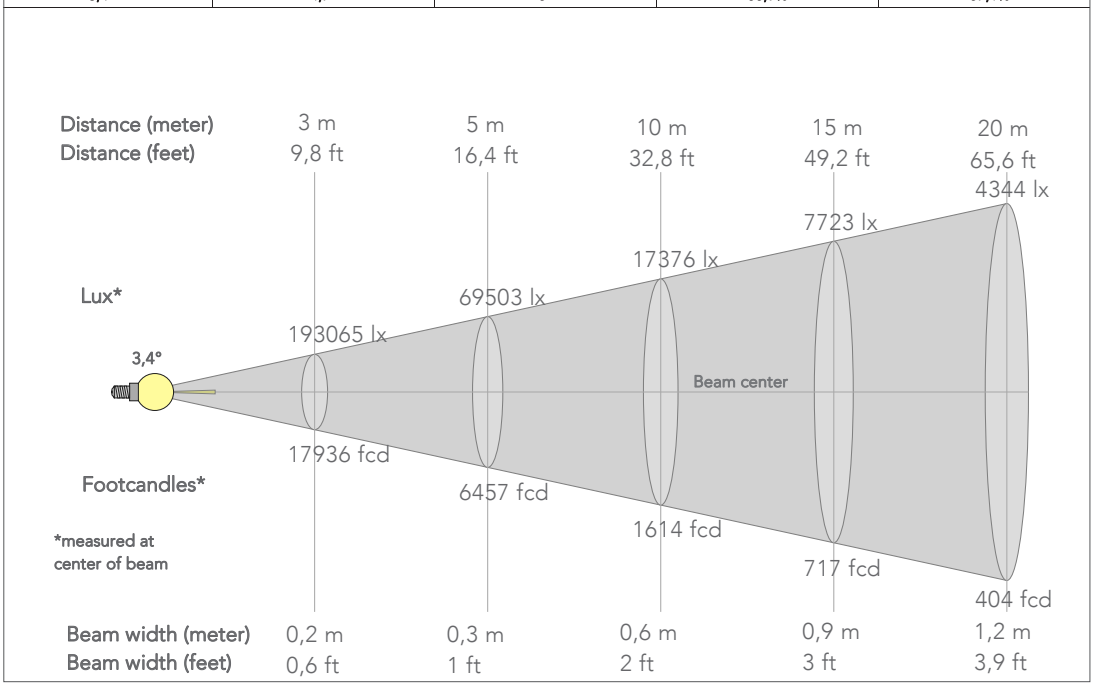

PRESET FULL ON

Beam angle 50%:

Beam angle 50%	Field angle 10%	Cut off angle 2,5%	Intensity ratio in 120° cone	Intensity ratio in 90° cone
30,4°	38,1°	39,9°	97,7%	97,4%

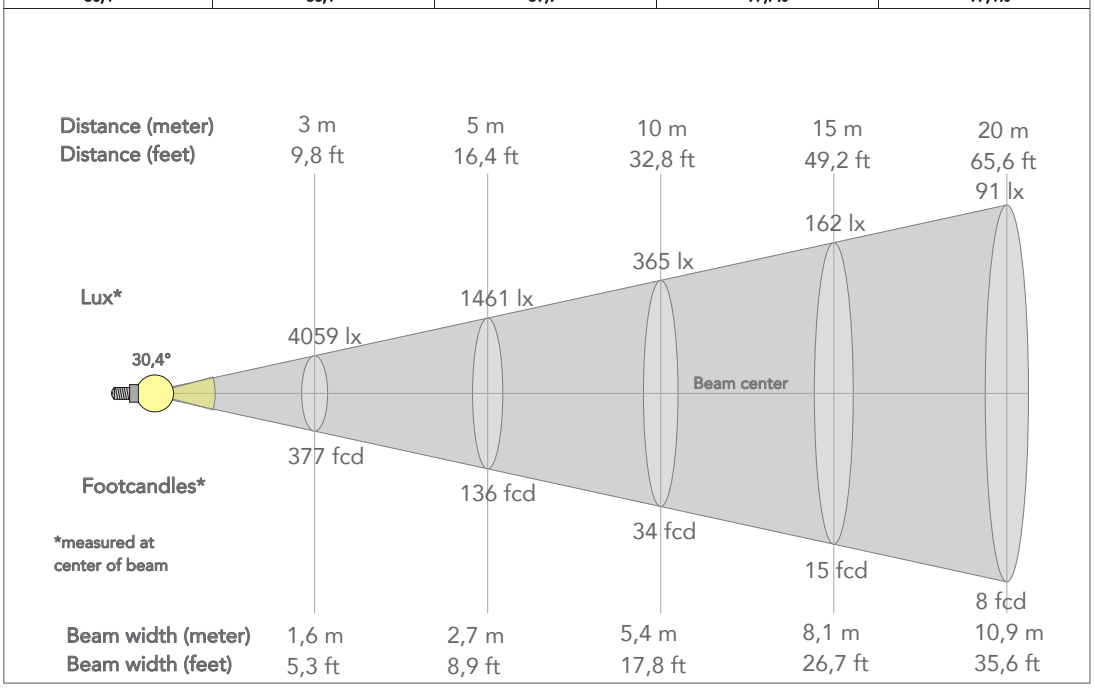

TECHICAL DRAWINGS

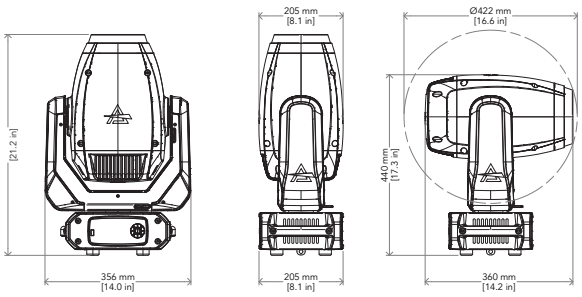

CERTIFICATIONS / APPROVALS

Conforms to UL STD. 1573
Certified to CSA STD: C22.2 NO. 166

Visit our website for specifications and tech documentations

Skjal sótt af '00000000000' dags: 23.10 2026

VersaPar

12x10W RGBW/FC LED compact zoom PAR

ORDER CODE: **VERSAPAR**

VersaPar is a LED zoom PAR designed for rental companies. The multi-purpose concept combining high brightness, wide zoom range and advanced colour mixing make this a unique fixture. **VersaPar** is equipped with 10° - 60° unrivalled zoom range, high efficiency, perfect chromatic uniformity, HD dimming technology and totally silent operation.

MAIN FEATURES

- 12x10W RGBW/FC LED
- Wide zoom range from 10° - 60° (1:6 zoom)
- HD dimming with selectable PWM
- Silent operation for studio application

TECHNICAL SPECIFICATION

LIGHT SOURCE
- Source: 12x10W RGBW / FC LEDs
- Luminous flux: (10°) 1'450 lm - (60°) 1'786lm
- Lux: (10°) 3'144 lx - (60°) 249lx @5 m full
- Source life expectancy: > 50.000 h

OPTICS
- Zoom: 10° - 60° motorised linear zoom
- Lens type: plano-convex lens path

COLOUR SYSTEM
- Colour mixing: RGBW / FC
- Colour wheel: virtual colour wheel with macros
- Macros: built-in white presets

DYNAMIC EFFECTS
- Static mode: selection of static colour
- Manual mode: manual adjustment of colour
- Auto mode: built-in programs with execution speed adjustment

BODY
- Body: sturdy die-cast aluminium body
- Body colour: black

CONTROL
- Protocols: DMX512
- DMX channels: 5 / 7 / 10channel
- Display: Graphic User Interface
- Firmware upgrade: yes, via USB - DMX interface (UPBOX1) not included
- Master/Slave: for synchronised operation of more units linked in a chain

ELECTRONICS
- Dimmer: linear 0 ~ 100% electronic dimmer
- Dimmer curves: 4 selectable dimming modes available
- Strobe / shutter: 1 - 28 Hz, electronic
- Operating temperature: -10° ~ +40°
- LED Control: flicker free operation
- Selectable PWM: 600 ~ 25.000 Hz

ELECTRICAL
- Mains power supply: 100-240V - 50/60Hz
- Max power consumption: 120W
- Output (at 230V): 12 units on a single power line
- Power factor: > 0,94

PHYSICAL
- IP rating: 30
- Cooling: active, silent operation
- Suspension and fixing: double hanging bracket suitable for safe hanging and for floor positioning
- Signal connection: XLR 3p + 5p IN/OUT connectors
- Power connection: Neutrik powerCON IN/OUT connectors
- Dimensions (WxHxD): 262x350x261mm
- Weight: 5,5kg

CERTIFICATIONS / APPROVALS
- Certifications / Approvals: CE, UKCA, RCM

ACCESSORIES & RELATED PRODUCTS

9513FCAL03	Ass. 3x2.5mm TH07 cable, 16A 3p 230V CEE plug, MENAC3FCA socket, L.3m
9533FCAL03	Ass. 3x2.5mm TH07 cable, SHUKO plug, MENAC3FCA socket, L.3m
958025L03	3x2.5mm TH07 Cable, 20A 3p PwCon FCA, 20A 3p PwCon FCB, L. 3m
C6002B	Slim aluminum clamp, 200kg loading, 48-51mm tubes, M10 bolt, Black
RSR0630B	Steel security cable for hanging bodies, inox steel shackle, L=60 cm, black
TOUR53413L03	Dmx cable HC5340. CANC3MXX XLR 3p->CANC3FXX XLR (f) 3p, L.3m
TOUR53415L03	Dmx cable HC5340. CANC5MXX XLR 5p->CANC5FXX XLR (f) 5p, L.3m
FCLPAR4190	Flight case for 8 STUDIOCOB, VERSAPAR
FCLPAR4190E	Flight case with internal compartments to contain 6 pcs STUDIOCOB, VERSAPAR
STUDIOCOBBD	Barn door 4 directional flaps to adjust the light beam, f. frame included
UPBOX1U	Firmware uploader kit, USB IN, 3pin XLR DMX OUT, USB OUT

Skjal sótt af '0000000000' dags: 23.10 2026

PRESET FULL ON

Beam angle 50%: 10°

Beam angle 50%	Field angle 10%	Cut off angle 2,5%	Intensity ratio in 120° cone	Intensity ratio in 90° cone
7,9°	11°	14,1°	99,9%	98,5%

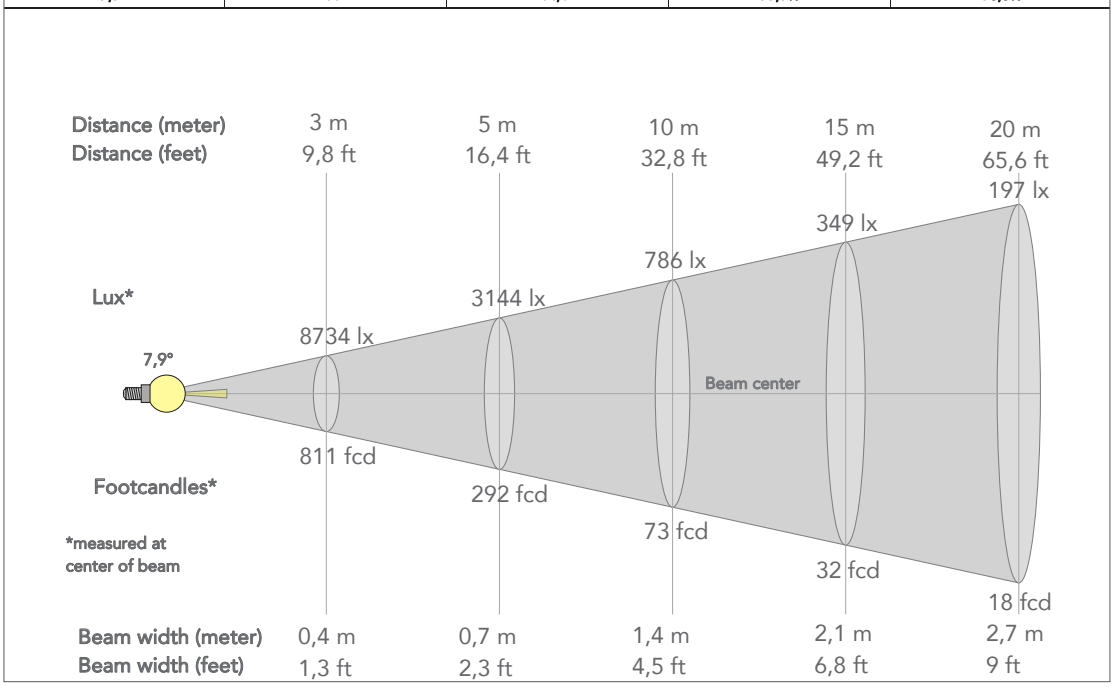

PRESET FULL ON

Beam angle 50%: 60°

Beam angle 50%	Field angle 10%	Cut off angle 2,5%	Intensity ratio in 120° cone	Intensity ratio in 90° cone
31,3°	48,9°	61,4°	99,8%	99,5%

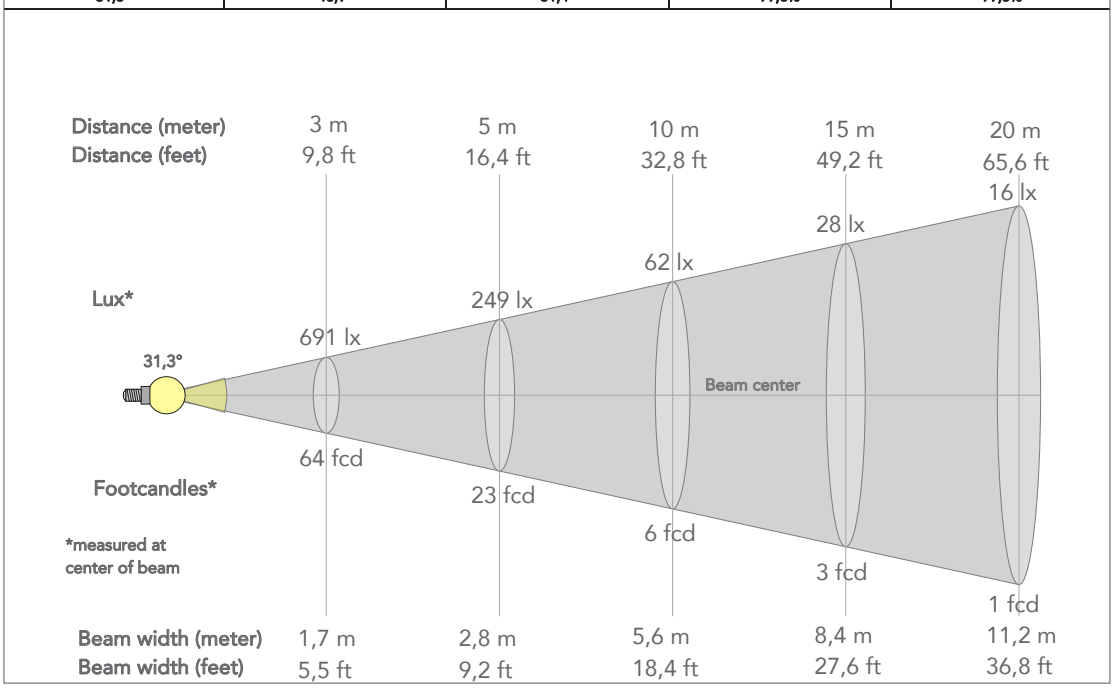

TECHNICAL DRAWINGS

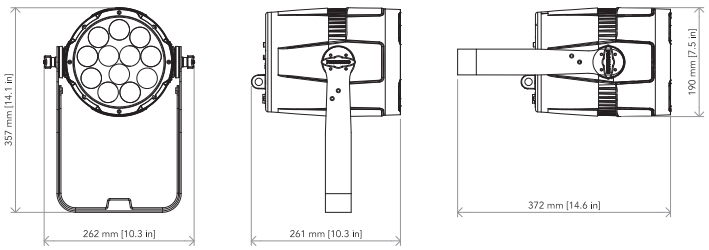

CERTIFICATIONS / APPROVALS

Visit our website
for specifications and
tech documentations

Skjal sótt af '0000000000' dags: 23.10 2026

Mini **VersaPar**

7x10W RGBW compact zoom PAR

ORDER CODE: **MINIVERSAPAR**

Mini **VersaPar** is a compact indoor LED zoom PAR designed for rental companies. The multi-purpose concept combining high brightness, wide zoom range and advanced colour mixing truly makes this a unique fixture. Mini VersaPar is equipped with 10° - 40° unrivalled zoom range, high efficiency, perfect chromatic uniformity, HD dimming technology and totally silent operation.

MAIN FEATURES

- 7x10W RGBW/FC LED
- Wide zoom range from 10° - 40° (1:4 zoom)
- Silent operation for studio application

TECHNICAL SPECIFICATION

LIGHT SOURCE
- Source: 7x10W RGBW LEDs
- Luminous flux: (10°) 1'012 lm - (40°) 1'335lm
- Lux: (10°) 4'415 lx - (40°) 378lx @3 m
- Source life expectancy: > 50.000 h

OPTICS
- Zoom: 10° - 40° motorised linear zoom
- Lens type: honeycomb gapless plano-convex optics

COLOUR SYSTEM
- Colour mixing: RGBW / FC
- White presets: 2.800 K - 10.000K
- Colour wheel: virtual colour wheel with macros
- Macros: several pre-built pixel macros with adjustable speed

DYNAMIC EFFECTS
- Static mode: selection of static colour
- Manual mode: manual adjustment of colour
- Auto mode: built-in programs with execution speed adjustment
- Sound mode: music activation through internal microphone and sensitivity control

BODY
- Body: sturdy die-cast aluminium body
- Body colour: black

CONTROL
- Protocols: DMX512
- DMX channels: 5 / 7 / 10channel
- Wireless Control: optional, proprietary protocol compatible with WIFIBOX, WDBOX
- Display: 4 chars display
- Firmware upgrade: yes, via USB - DMX interface (UPBOX1) not included
- Master/Slave: for synchronised operation of more units linked in a chain

ELECTRONICS
- Dimmer: linear 0 ~ 100% electronic dimmer
- Dimmer curves: selectable dimming modes available
- Strobe / shutter: 1 / 28 Hz, electronic
- Operating temperature: -10° ~ +40°
- LED Control: flicker free operation

ELECTRICAL
- Mains power supply: 100-240V - 50/60Hz
- Max power consumption: 69,2W
- Max power consumption (at 120V): 70W
- Output (at 230V): 54 units on a single power line
- Output (at 120V): 11 units on a single power line

PHYSICAL
- IP rating: 30 with a protective vent to prevent condensation, dust, compensate pressure
- Cooling: active, silent operation
- Data: USB port for USB WIFI transmitter (optional)
- Signal connection: XLR 3p + 5p IN/OUT connectors
- Power connection: Seetronic powerCON IN/OUT connectors
- Dimensions (WxHxD): 235xx301x223mm
- Weight: 3,7kg

CERTIFICATIONS / APPROVALS
- Certifications / Approvals: CE, UKCA, RCM

ACCESSORIES & RELATED PRODUCTS

9313FCAL03	Ass. 3x2.5mm TH07 cable, 16A 3p 230V CEE plug, SETSAC3FCA socket, L.3 m
9333FCAL03	Ass. 3x2.5mm TH07 cable, SHUKO plug, SETSAC3FCA socket, L.3 m
938025L03	3x2.5mm TH07 Cable, 20A SETSAC3FCA, 20A SETSAC3FCB, L. 3m
C6002B	Slim aluminum clamp, 200kg loading, 48-51mm tubes, M10 bolt, Black
RSR0630B	Steel security cable for hanging bodies, inox steel shackle, L=60 cm, black
TOUR53413L03	Dmx cable HC5340. CANC3MXX XLR 3p->CANC3FXX XLR (f) 3p, L.3m
TOUR53415L03	Dmx cable HC5340. CANC5MXX XLR 5p->CANC5FXX XLR (f) 5p, L.3m
WIFIBOX	DMX controller interface, Wi-Fi/DMX IN, Wi-Fi / DMX OUT
WDBOX	Wireless DMX Transceiver, IN/OUT 3-pin XLR, distance 200m, 2.4 GHz, 0.6 kg
WIFIUSB	USB Wi-Fi transreceiver, compatible with WIFIBOX and WDBOX
UPBOX1U	Firmware uploader kit, USB IN, 3pin XLR DMX OUT, USB OUT

Skjal sótt af '0000000000' dags: 23.10 2026

LumiPar 12UQPro

12x8W RGBW/FC wash light super-slim PAR LED

ORDER CODE: **LUMIPAR12UQPRO5**

Lumipar 12UQPro is a super-slim par LED designed for professional use to be a powerful wash light and perform an outstanding chromatic capacity through the new optical design and light source based on 4 colours mixing. **Lumipar** 12UQPro is compatible with the infrared remote controller for intuitive and interactive use without need any external DMX units and can be also controlled wireless through the optional USB WIFI transceiver in combination with WIFIBOX and the SmartColor app.

MAIN FEATURES

- 12x8W RGBW/FC high-power LED
- Superior optical design to ensure advanced chromatic synthesis
- Flicker-free operations
- USB port for USB WIFI transceiver (optional)
- Silent operation and HD dimming system

TECHNICAL SPECIFICATION

LIGHT SOURCE
- Source:12x8 W RGBW LEDs
- CCT:W: 6.600
- Luminous flux:2'689 lm
- Lux:2'871 lx @3 m full
- Source life expectancy: > 50.000 h

OPTICS
- Beam angle:15 °
- Lens diameter:31 mm
- Additional optics:15° (included) - 25° (optional) - 45° (opional)

COLOUR SYSTEM
- Colour mixing: RGBW / FC
- Colour wheel: virtual colour wheel with macros

DYNAMIC EFFECTS
- Static mode: selection of static colour
- Manual mode: manual adjustment of dimmer and strobe
- Auto mode: built-in programs with execution speed adjustment

BODY
- Body: sturdy die-cast aluminium body
- Body colour: black

CONTROL
- Protocols: DMX512
- DMX channels:4 / 9 channel
- Wireless Control: optional, proprietary protocol compatible with WIFIBOX, WDBOX
- Display: LED display user interface
- Firmware upgrade: yes, via USB - DMX interface (UPBOX1) not included
- IR: infrared sensor controlled by remote
- Master/Slave: for synchronised operation of more units linked in a chain

ELECTRONICS
- Dimmer: linear 0 ~ 100% electronic dimmer
- Dimmer curves:4 selectable dimming modes available
- Strobe / shutter:1 - 28 Hz, electronic
- Operating temperature: -10° ~ +45°
- LED Control: flicker free operation

ELECTRICAL
- Mains power supply: 100-240V - 50/60Hz
- Max power consumption:77 W
- Max power consumption (at 120V):78 W
- Output (at 230V):17 units on a single power line
- Output (at 120V):9 units on a single power line

PHYSICAL
- IP rating:44
- IK rating:07
- Cooling: passive cooling and fan-free
- Suspension and fixing: double hanging bracket suitable for safe hanging and for floor positioning
- Data: USB port for USB WIFI transmitter (optional)
- Signal connection: variants available
- Power connection: variants available
- Dimensions (WxHxD):253x200x237 mm
- Weight:3,3 kg

CERTIFICATIONS / APPROVALS
- Certifications / Approvals: CE, UKCA, RCM

ACCESSORIES & RELATED PRODUCTS

9313FCAL03	Ass. 3x2.5mm TH07 cable, 16A 3p 230V CEE plug, SETSAC3FCA socket, L.3 m
9333FCAL03	Ass. 3x2.5mm TH07 cable, SHUKO plug, SETSAC3FCA socket, L.3 m
938025L03	3x2.5mm TH07 Cable, 20A SETSAC3FCA, 20A SETSAC3FCB, L. 3m
C6002B	Slim aluminum clamp, 200kg loading, 48-51mm tubes, M10 bolt, Black
FCLUMI8	Flight case for 8pcs of LUMIPAR12UQPRO/12UH/12UAW/12UQ/SUNPIX24
RSR0630B	Steel security cable for hanging bodies, inox steel shackle, L=60 cm, black
TOUR53413L03	Dmx cable HC5340. CANC3MXX XLR 3p->CANC3FXX XLR (f) 3p, L.3m
TOUR53415L03	Dmx cable HC5340. CANC5MXX XLR 5p->CANC5FXX XLR (f) 5p, L.3m
VDE15SEU	Power cable VDE socket, Shuko plug
LUMIPAR1801BD	Barn door 4 directional flaps to adjust the light beam, f. frame not included
ARCLUMIL25D38	Optic lens 25°, D.38mm
ARCLUMIL45D38	Optic lens 45°, D.38mm
WIFIUSB	USB Wi-Fi transreceiver, compatible with WIFIBOX and WDBOX
WIFIBOX	DMX controller interface, Wi-Fi/DMX IN, Wi-Fi / DMX OUT
WDBOX	Wireless DMX Transceiver, IN/OUT 3-pin XLR, distance 200m, 2.4 GHz, 0.6 kg
LUMIPARIRCH	RGBWA IR remote controller, manual / auto modes, for LUMIPAR IR series
UPBOX1U	Firmware uploader kit, USB IN, 3pin XLR DMX OUT, USB OUT

Skjal sótt af '0000000000' dags: 23.10 2026

PRESET FULL ON

Beam angle 50%: 16,8°

Beam angle 50%	Field angle 10%	Cut off angle 2,5%	Intensity ratio in 120° cone	Intensity ratio in 90° cone
16,8°	30,7°	42°	100,0%	99,9%

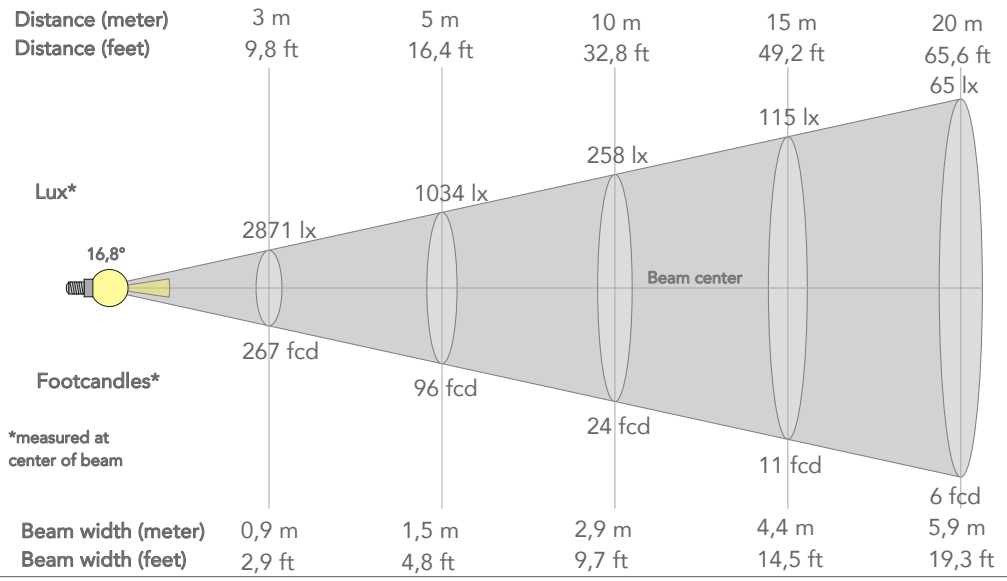

TECHICAL DRAWINGS

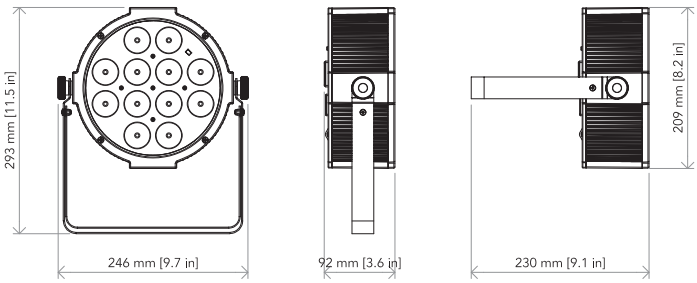

CERTIFICATIONS / APPROVALS

Visit our website
for specifications and
tech documentations

Skjal sótt af '0000000000' dags: 23.10 2026